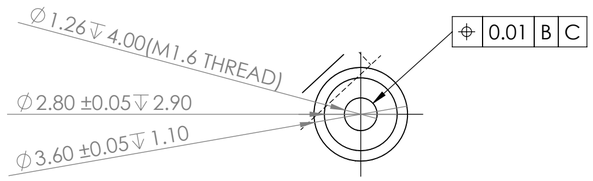

DETAIL B X 2

SCALE 6 : 1

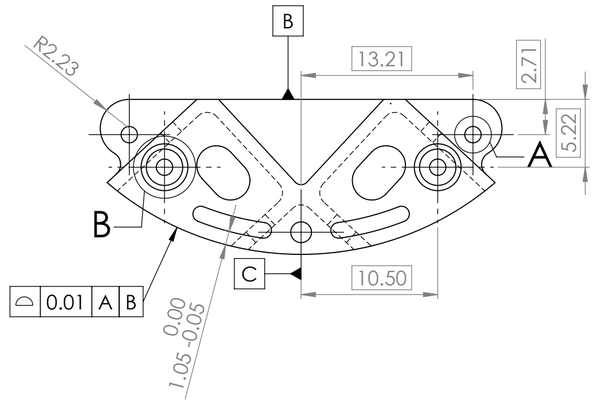

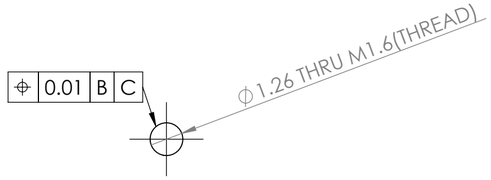

X 2

DETAIL A

SCALE 6 : 1

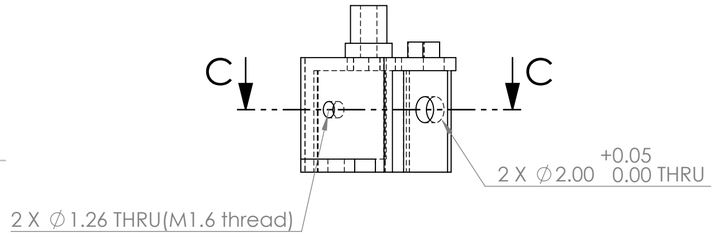

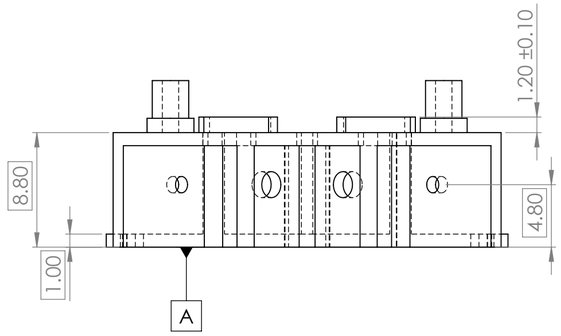

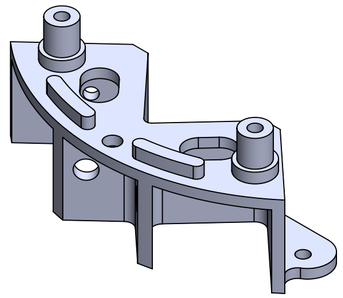

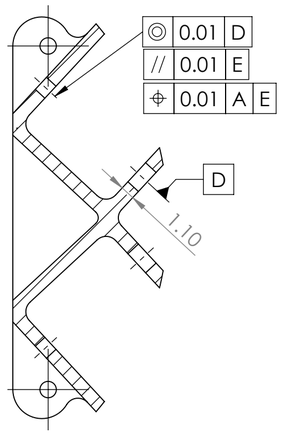

SECTION C-C

SCALE 3 : 1

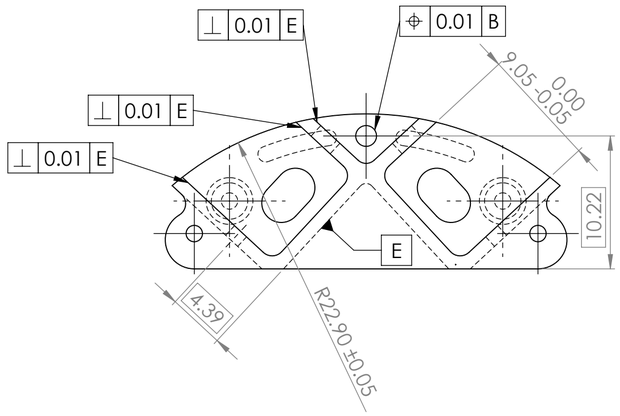

NOTE : All profiles and tolerances are symmetric about datum C

NOTE: Consider a general tolerance of 0.05mm in case where it is not mentioned.

			TITLE: 2.6.3MNHH_2	
			SCALE: 3:1	
PARTICULARS	DATE	MATERIAL:	DWG NO: 01	
DRAWN BY	08-12-2025	ALUMINUM 6061		
CHK'D BY	08-12-2025	WEIGHT: (gm)	SHEET REVISION :	SHEET 1 OF 1
APPV'D BY	08-12-2025		ALL DIMENSIONS IN MM	A2